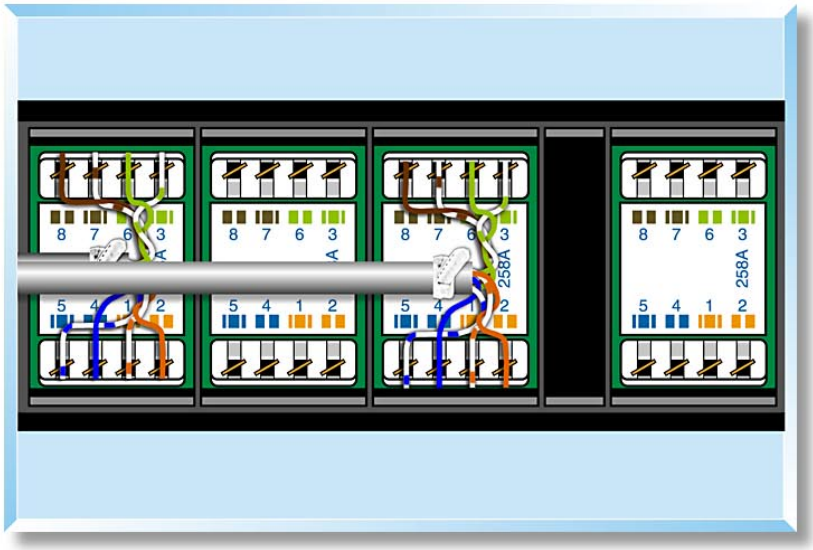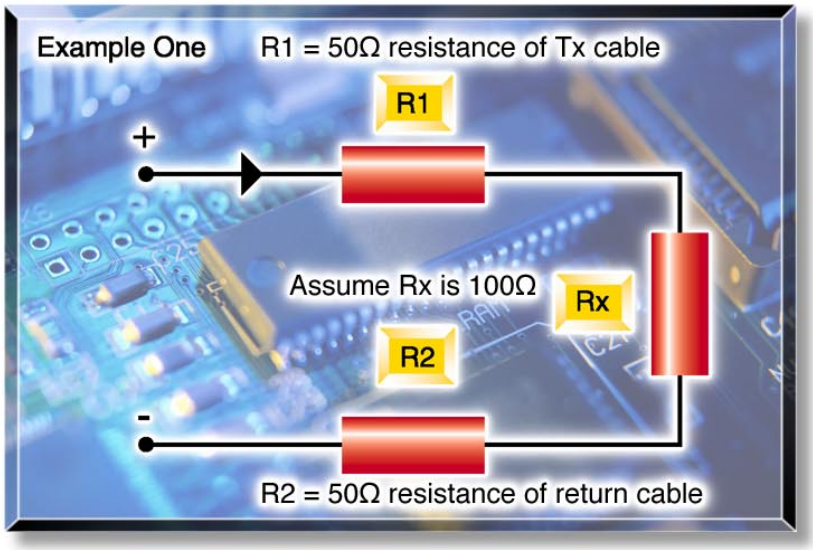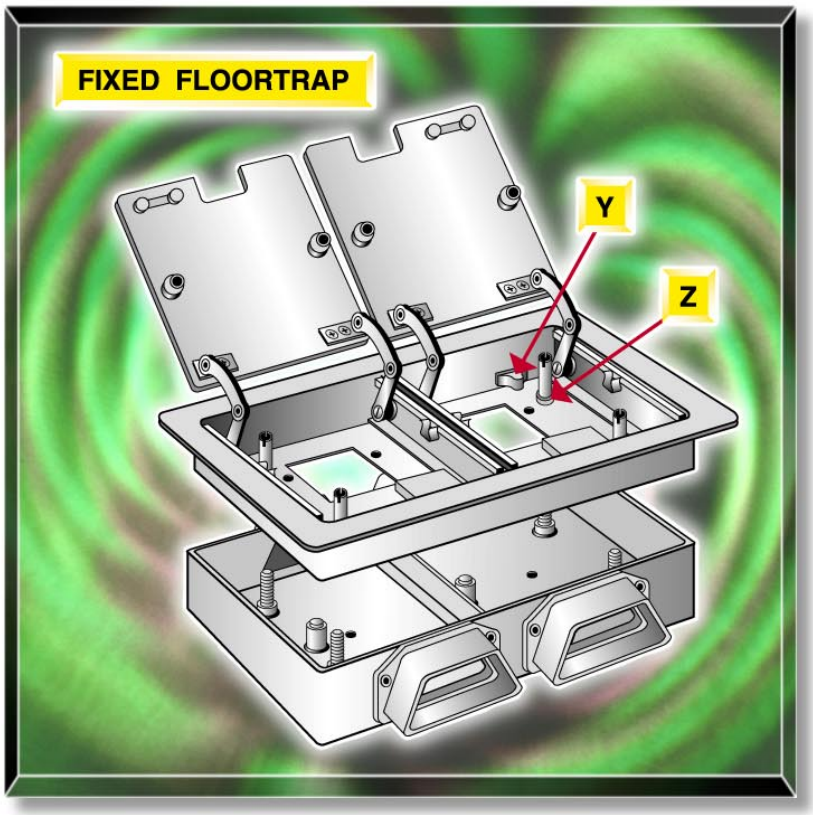A selection of Technical Illustrations from a series of five hundred illustrations commissioned by CableNet Training Services for their Data Telecomms Training Manuals